TOP VIEW

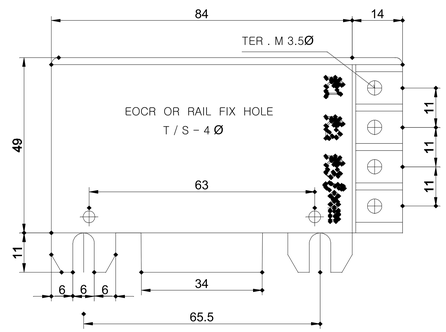

FRONT VIEW

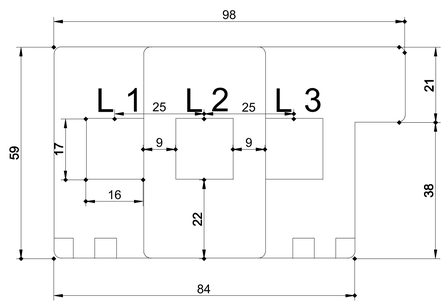

/Rating

/ Max Voitage	1150V
/ Frequency	50Hz~60 Hz
/ Accuracy Class	1.0~ 3.0%
Over Curret Factor	40In/1Sec

Daeboong ( ) E&C	PROJEC TTITLE 3	CHK'D BY	SCALE 1 : 2	DRAWING TITLE CD-S50	B.C.C NO	JOB NO	REV NO
		CHK'D BY	DATE 2008. 5. 8		DRWG NO	SHEET NO 01	
		CHK'D BY	DRWN BY				