TOP VIEW

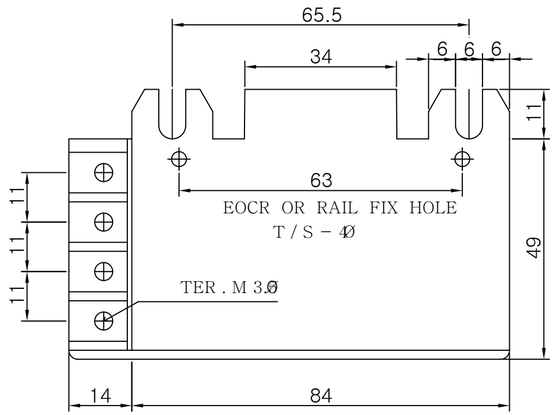

FRONT VIEW

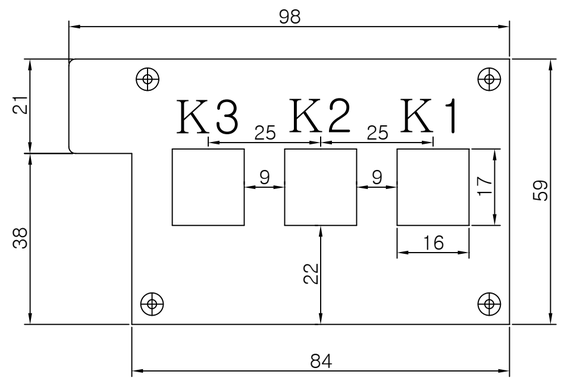

정격/Rating

최고전압 / Max Voitage	1150V
주 파 수 / Frequency	50Hz~60 Hz
정밀계급 / Accuracy Class	1.0~ 3.0%
Over Curret Factor	40In/1Sec

Daeboong (주)대붕 E&C	PROJEC TTITLE 3상 계기용 변류기	CHK'D BY	SCALE 1 : 2	DRAWING TITLE CD-S50	B.C.C NO	JOB NO	REV NO
		CHK'D BY	DATE 2014. 7. 11		DRWG NO	SHEET NO 01	
		CHK'D BY	DRWN BY				